opoczno 1883

SPLENDOUR

## SPLENDOUR CLEANON WALL HUNG BOWL

to be completed with SPLENDOUR SLIM toilet seat (K98-0139)
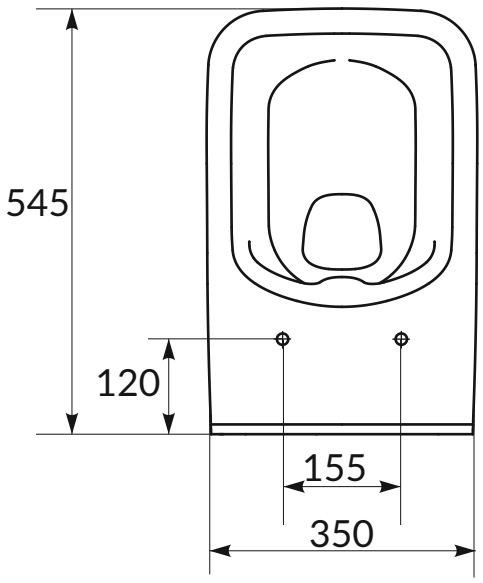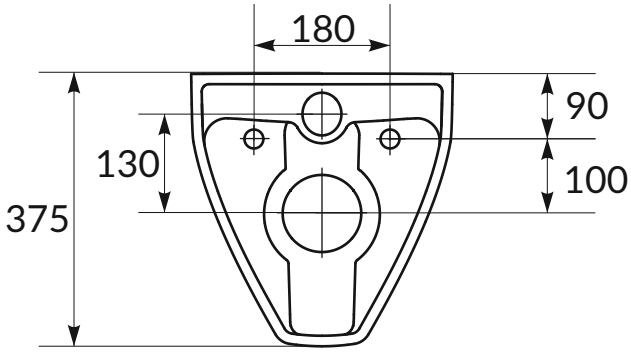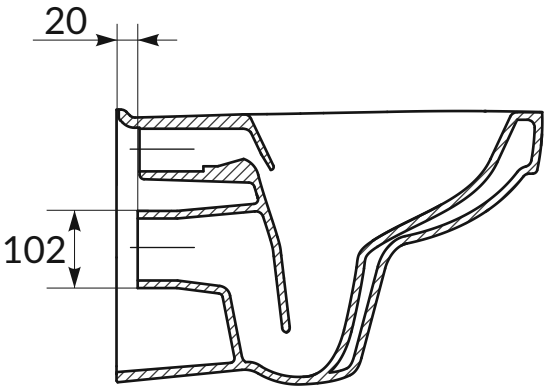
| | |
|---|---|
| Product code: | K40-003 |
| Index: | CCHZ1001081964 |
| Size: | 545 x 350 x 375 [mm] |
| Weight: | 20,7 [kg] |
| Norm: | PN EN 33 |